REV	REVISION DESCRIPTION	B.O.M.	ELEC. ENG	MECH. ENG	CHECKED	APPROVED
A	UPDATED DESCRIPTION, DIMENSION, NOTES, AND CHART. M.E.B. 7/25/14	N/A	N/A	WEF 8/27/14	KDB 8/27/14	SMT 8/24/14

REVISION HISTORY

NOTES:

1. DOORS REQUIRE A 24" [610mm] RADIUS SWING HINGED AT LEFT SIDE OF FRONT PANEL; FRONT AND REAR CLEARANCE MINIMUM IS 36" [914mm], TOP CLEARANCE MINIMUM IS 24" [610mm], AND SIDE CLEARANCE MINIMUM IS 1" [25mm].
2. THE PRESSURE VESSEL IS BUILT TO COMPLY WITH ASME SECTION IV.
3. APPROPRIATE SAFETY RELIEF VALVE AND BUSHING ARE DETERMINED BY TRIM PRESSURE AND ARE SUPPLIED IN THE TRIM KIT TO BE INSTALLED BY OTHERS. INLET AND OUTLET ARE NPT AND SIZES ARE AS FOLLOWS:

   30# - 3/4" INLET X 1" OUTLET
   60# - 3/4" INLET X 1" OUTLET
   100# - 3/4" INLET X 1" OUTLET
   125# - 3/4" INLET X 1" OUTLET
   160# - 3/4" INLET X 1" OUTLET

4. 6" [152mm] FERNCO COUPLING SUPPLIED IN TRIM KIT TO BE INSTALLED BY OTHERS.
5. ALL DIMENSIONS ARE IN INCHES [MILLIMETERS] AND ARE FOR REFERENCE ONLY. THIS DRAWING IS NOT FOR CONSTRUCTION PURPOSES.

CUSTOMER CONNECTIONS			
ITEM	DESCRIPTION	SIZE	TYPE
A	WATER OUTLET	2"	NPT
B	EXHAUST OUTLET	6"	-
C	AIR INLET (SEE NOTE 4)	6"	-
D	CONDENSATE DRAIN	1/2"	NPT
E	WATER INLET	2"	NPT
F	FUEL INLET	1"	NPT
G	CUSTOMER ELECTRICAL CONNECTION 120V*60HZ	-	-
H	CONTROL DISPLAY	-	-
J	SAFETY VALVE CONNECTION (SEE NOTE 3)	1 1/4"	NPT
K	FLAME VIEW PORT	-	-

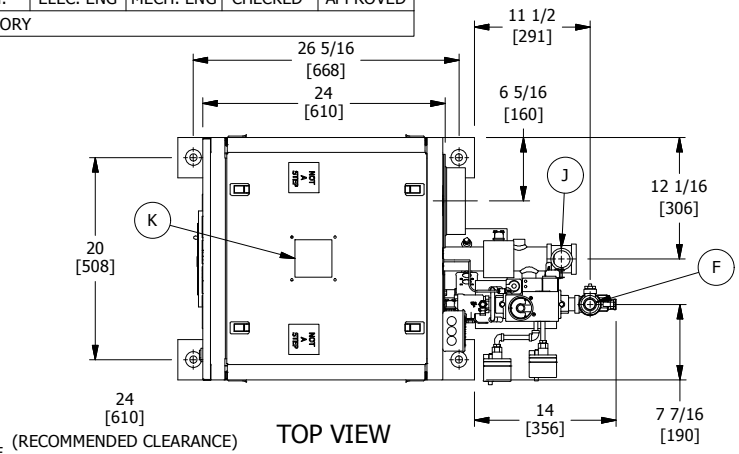

TOP VIEW

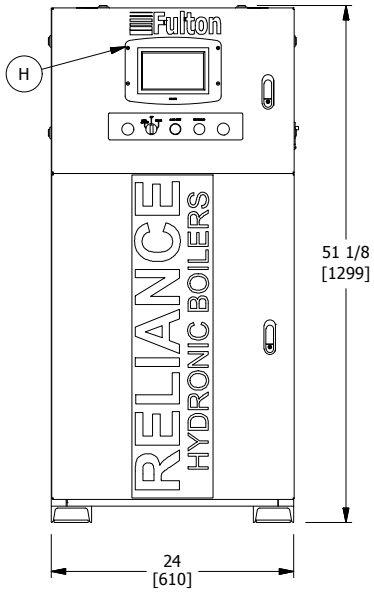

FRONT VIEW

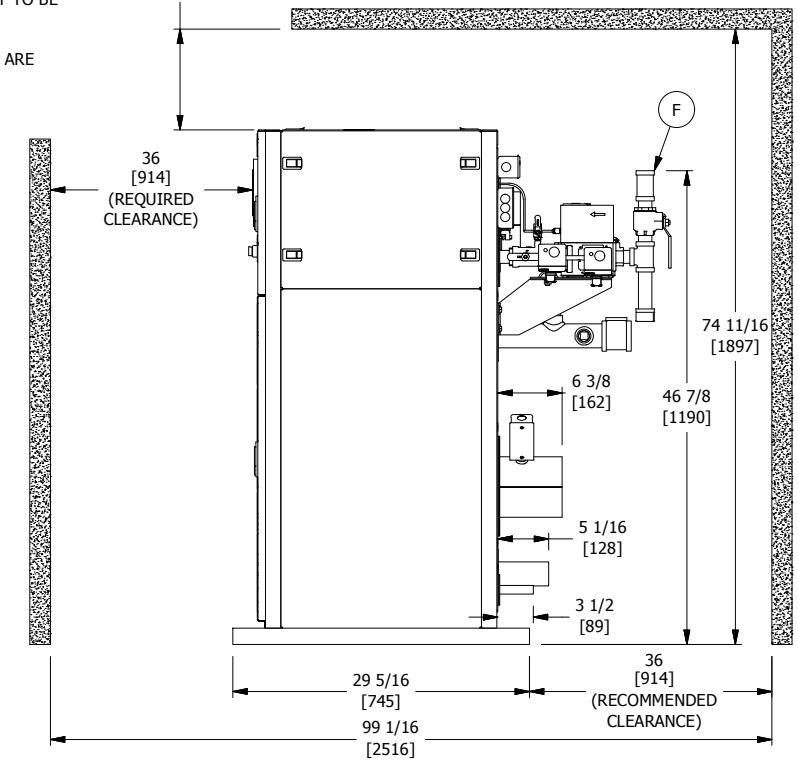

RIGHT SIDE VIEW

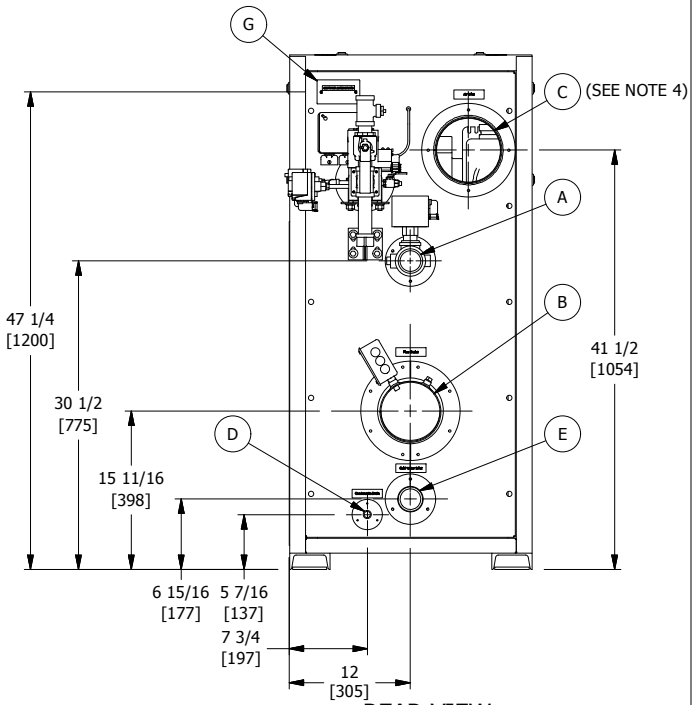

REAR VIEW

THIS DRAWING SUPERSEDES DRAWING NUMBER **R91-0011**

UNLESS OTHERWISE NOTED:
DIMENSIONS ARE IN INCHES
TOLERANCES ON
FRACTIONS ± 1/4
(2) PLACE DEC. ± .01
(3) PLACE DEC. ± .005
ANGLES ± 2 DEG.
SURFACE FINISH 250 MICRO-INCHES

This design and drawings are proprietary and are the exclusive property of The Fulton Companies. The corporation does not permit their use except with prior written consent.

The items shown in this drawing may be covered by one or more patents of The Fulton Companies.

THIRD ANGLE PROJECTION
1 OF 1

DRAWN BY:	MECH. ENG:	JOB NUMBER:
M.GIGLIOTTI 12/12/2011	K.BOTTORFF 6/28/2012	
CHECKED BY:	ELEC. ENG:	PROJECT NAME:
W.FOLNSBEE 7/24/2012	N/A	
B.O.M. REVIEW	APPROVED BY:	PROJECT MANAGER:
N/A	T.SARGENT 5/29/2012	

DESCRIPTION:
RLN-750, RLN-1000 AHRI HYDRONIC BOILER WITH CSD-1 / CSA FUEL TRAIN (4-14"WC NATURAL GAS) PRODUCT DATA SUBMITTAL END ASSEMBLY

SHEET 1 OF 1

The Fulton Companies
972 Centerville Road
Pulaski, New York USA 13142

Fulton

DRAWING NUMBER R91-0012

REV A